Classic Arm

The 6100 Series keyboard arms are extremely rugged, built to withstand the kind of heavy workouts associated with data entry professionals, commercial users and students. All 6100 arms fully articulate with both independent height and tilt adjustment, allowing users to adjust keyboard in a variety of comfortable positions during the work day. The 6100 Series arms are equipped with a ball bearing storage track.

Series Models

6130D
6130D21
6135D
6170D
61702100
6175D

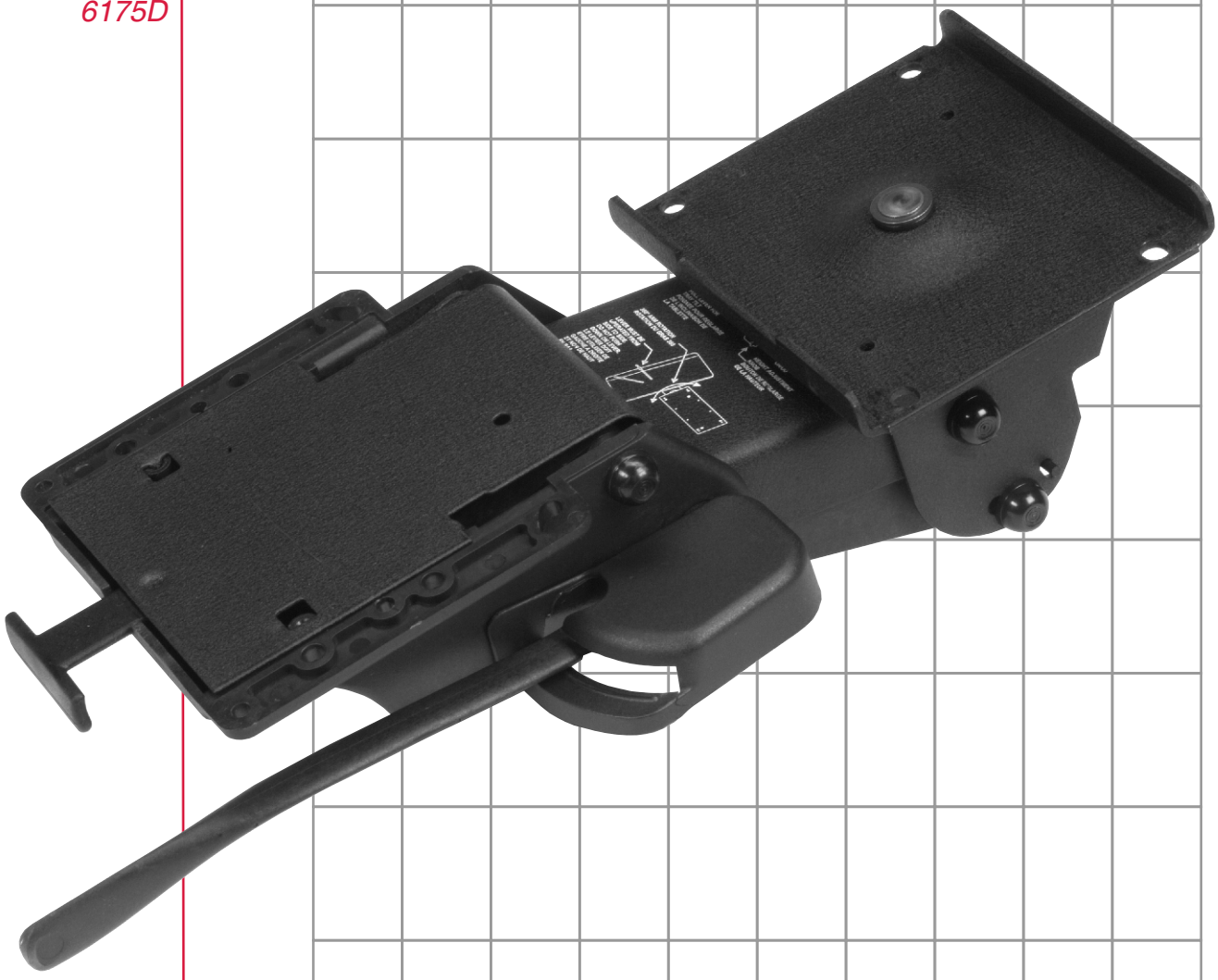

Keyboard Arms

501 Manitou Drive • Kitchener, Ontario, Canada • N2C 1L2
Tel: 519-748-5060 • Fax: 519-748-4095 • Toll Free : 1-866-521-8028
www.compxergonomics.com

Keyboard Arms Specs

6100 Series Classic Arm

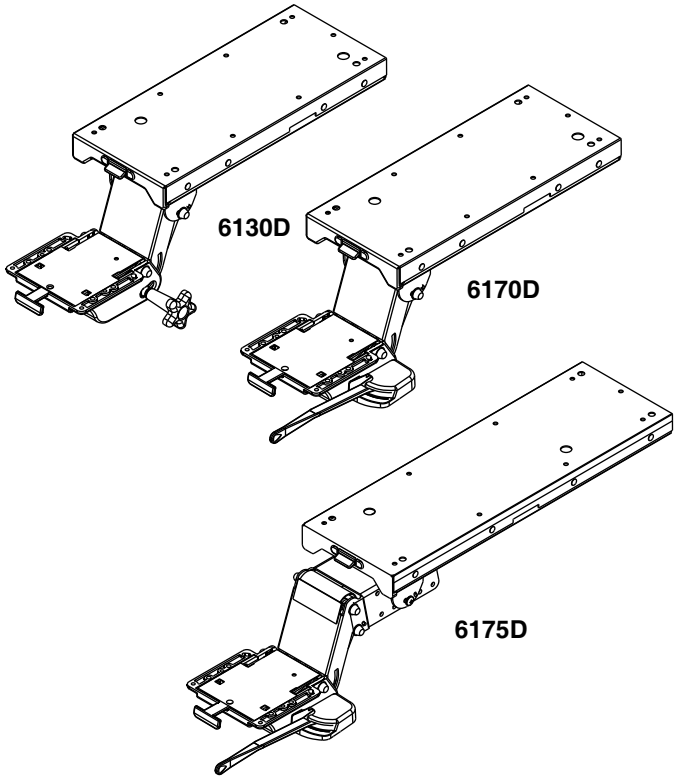

Features & Benefits

- Stable, durable design
- Knob and lever control releases / locks the arm during height adjustment
- Tilt adjustment latch on front of arm unlocks +10°/ -15° tilt
- Stores below work surface on a ball bearing track
- Track has a release lever on front to lock track in full out position
- Adjustable extension bracket available for corner applications.
- 360° swivel for side to side movement
- Meets or exceeds ANSI/BIFMA standards

Applications

- Typing and data entry
- Commercial and industrial users
- Education, learning and training centers

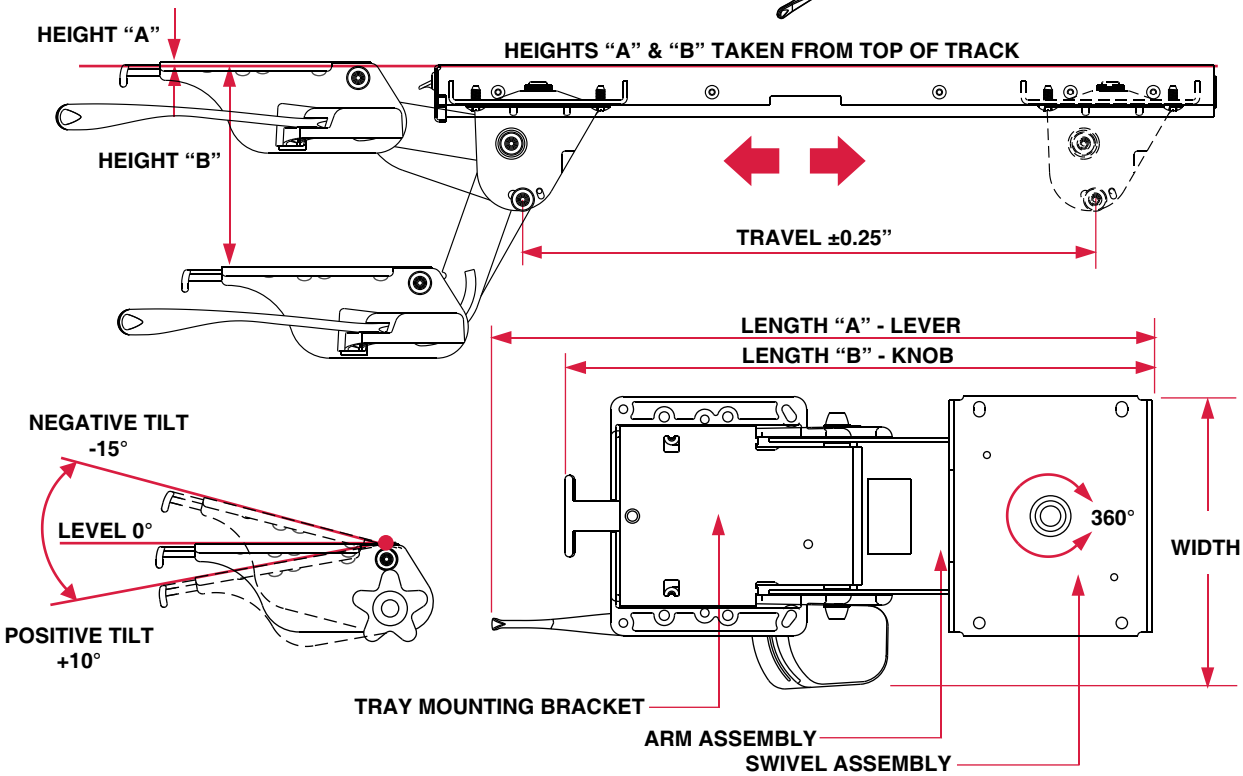

MODEL	(A) HEIGHT	(B)	WIDTH	LENGTH	TRAVEL	STORAGE	FINISH	WEIGHT
6130D	0.08"	5.67"	7.86"	14.21"	12.0"	16.75" Ball bearing	Black wrinkle paint	11 lbs
6130D21	0.08"	5.67"	7.86"	14.21"	16.0"	21.75" Ball bearing	Black wrinkle paint	13 lbs
6135D	0.08"	5.67"	7.86"	14.21"	12.0"	21.75" Ball bearing	Black wrinkle paint	14 lbs
6170D	0.08"	5.67"	7.18"	16.22"	12.0"	16.75" Ball bearing	Black wrinkle paint	11 lbs
61702100	0.08"	5.67"	7.18"	16.22"	16.0"	21.75" Ball bearing	Black wrinkle paint	13 lbs
6175D	0.08"	5.67"	7.18"	16.22"	12.0"	21.75" Ball bearing	Black wrinkle paint	14 lbs

NOTE:
1. Weight = packaged shipping weight per unit.
2. Specifications are subject to change without notice.

CompX ERGONOMX